SHALLCO SERIES 26
Part Number: 2641D 125 VDCABC

General:
Meets requirements for 1 - 25 ampere switching of resistive loads to .75 power factor at voltages to 600 V AC and 250 V DC resistive loads

Electrical:
15A/600 VAC
20A/600 VAC (RES)
25A/120 VAC
3A/125 VDC
1A/250 VDC

* Current carrying capacity: 25 amperes
* Dielectric Withstanding Voltage: 2200 Vrms
* Contact Resistance: Initial, 10 milliohms max.
* Insulation Resistance: 100 Megohms min., initial
*Switch is supplied with a lighted escutcheon plate
Input Voltage: 125 VDC
Wiring: As Shown

Mechanical:
* Sections: 1 Active
* Positions: 2 Shaft will spring return to the center (rest) position (See Contact Table)
*Type Acton: Non-Shorting
* Detent type: Section 1 - Spring Return
* Indexing: 45° positive detent
* Rotational Life: 65,000 operations

Materials and Finishes:
* Rotors and Stators: Thermoset Plastic, UL 94VO
* Rotor contacts: Phosphor bronze
* Stator contacts: Silver plated copper, screw type
* Terminal hardware: silver plated brass
* Exterior Metal: Steel with zinc chromate finish
* Knob: thermoset phenolic

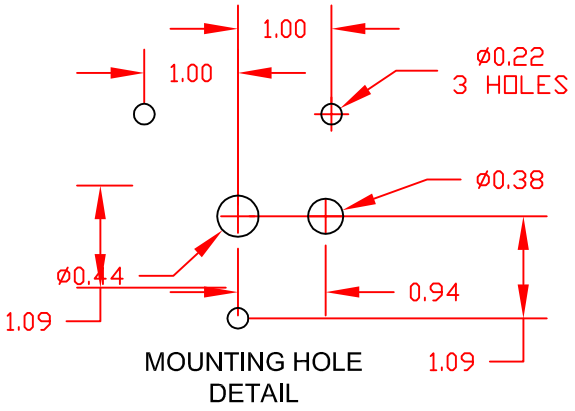

MOUNTING HOLE DETAIL
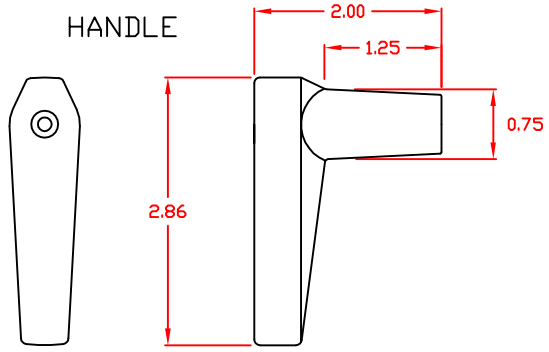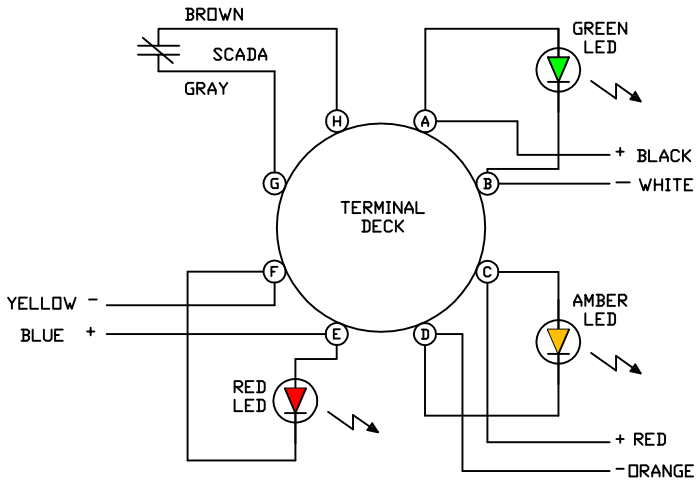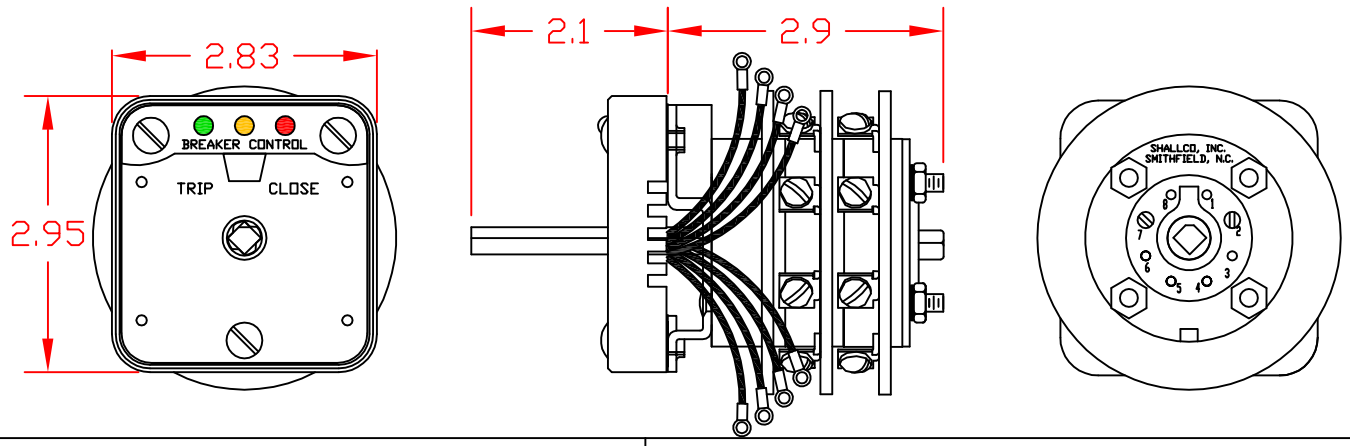
DECK	CONTACTS	POSITION TRIP	POSITION normal	POSITION CLOSE
1	11-12 — 18	X		
	11-12 — 13			X
	15-16 — 14	X		
	15-16 — 17			X