SHALLCO SERIES 26
Part Number: 2643D

General:
Meets requirements for 1 - 25 ampere switching of Resistive loads to .75 power factor at voltages to 600 VAC and 250 VDC resistive loads

Electrical:
* Ratings: 25A/120 VAC
  15A/600 VAC
  20A/600 VAC (RESISTIVE)
  3A/125 VDC
  1A/250 VDC

* Current carrying capacity: 25 amperes
* Dielectric Withstanding Voltage: 2200 Vrms
* Contact Resistance: Initial, 10 milliohms max.
* Insulation Resistance: 100 Megohms min., initial

Mechanical:
* Sections: 3
* Positions: 2
* Detent Type: Sections 1 & 2 - Spring Return, Section 3, Slip Detent
* Indexing: 45°
* Rotational Life: 65,000 operations

Materials and Finishes:
* Rotors and Stators: Thermoset Plastic, UL 94VO
* Rotor contacts: Phosphor bronze
* Stator contacts: Silver plated copper, screw type
* Terminal hardware: silver plated brass
* Exterior Metal: Steel with zinc chromate finish
* Knob: thermoset phenolic

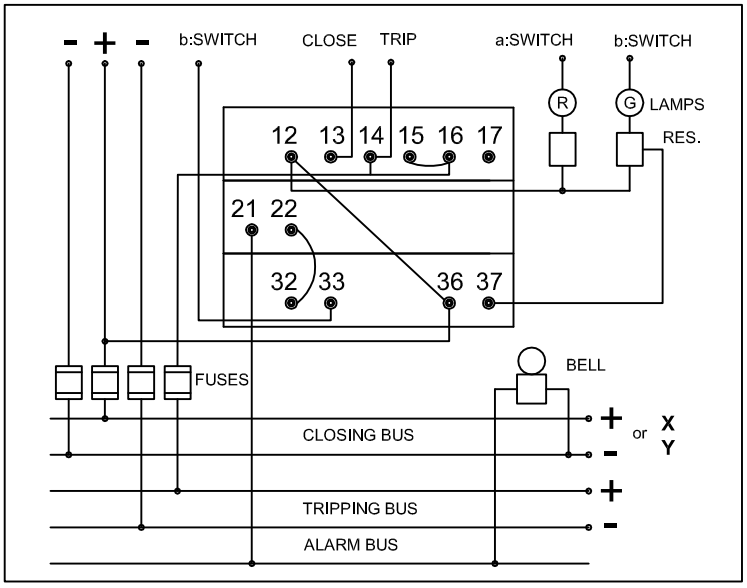

DECK	CONTACTS	POS. TRIP	POS. nat	POS. nac	POS. CLOSE
1	12 ⊣⊢ 13				X
	15-16 ⊣⊢ 14	X			
	15-16 ⊣⊢ 17				X
2	21 ⊣⊢ 22		X	X	
3	32 ⊣⊢ 33			X	X
	36 ⊣⊢ 37			X	X

• Contacts 15-16 connected nternally in Normal Position

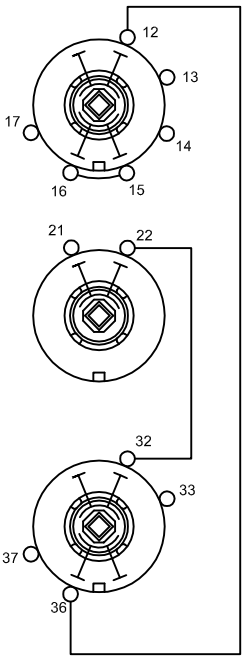

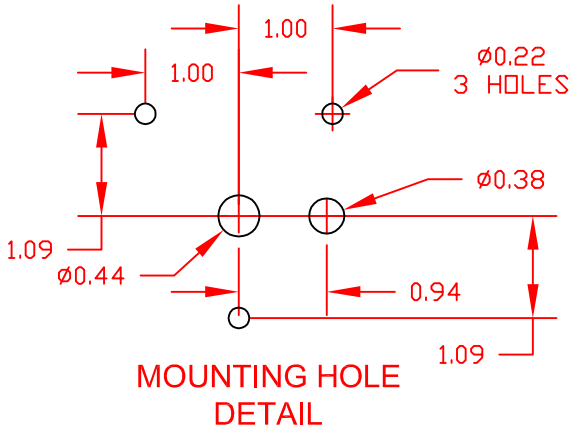
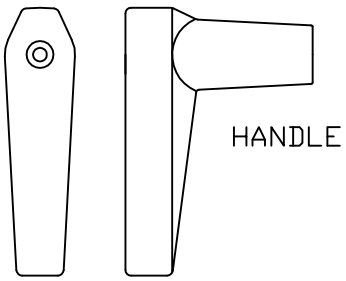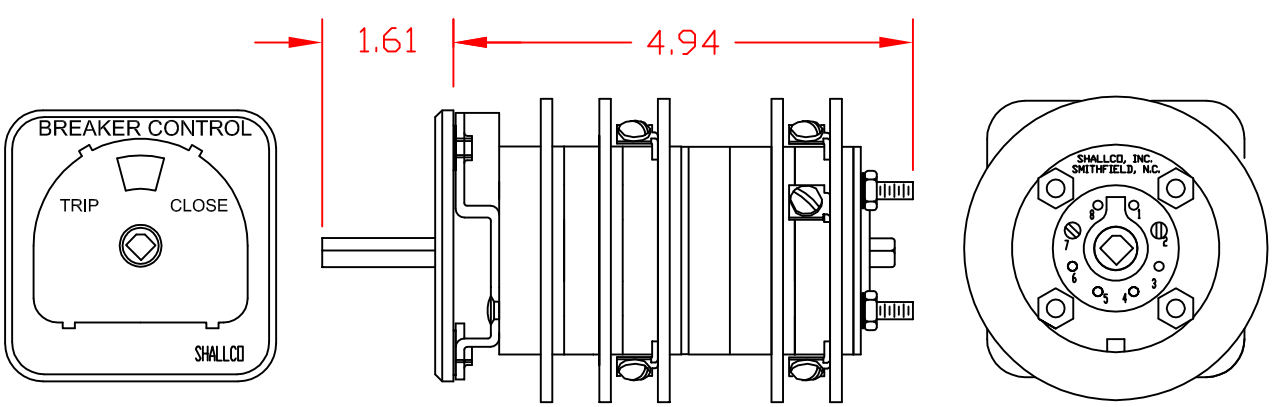
MOUNTING HOLE DETAIL