PART NUMBER: 1B06-4

ELECTRICAL:
RATINGS (UL):
16A @ 250 VAC 16A @ 250 VDC
7.5A @ 600 VAC
3 /4 HP @ 240 VAC

VOLTAGE: 600 VAC, 250 VDC
SWITCHING CAPACITY: UP TO 16 AMPERES
DIELECTRIC WITHSTANDING VOLTAGE: 2500 VRMS INITIAL
CONTACT RESISTANCE: 10 MILLIOHMS MAX. (4 MILLIOHMS AVERAGE)
INSULATION RESISTANCE: 1000 MEGHOHMS MIN. INITIAL

MECHANICAL:
POLES: 6
INDEXING: 90°
TERMINAL TYPE: SCREW
SWITCHING: NON-SHORTING
POSITIONS: 4 (ON1-ON2-ON1-ON2)
CONTACTS: BREAK BEFORE MAKE
CONSTRUCTION: CLOSED

SUPPLIED WITH TERMINAL SCREWS AND KNOB

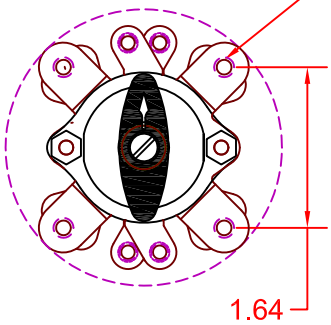

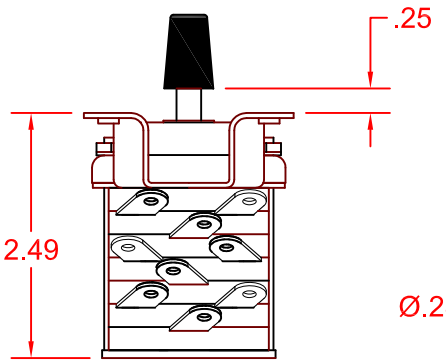

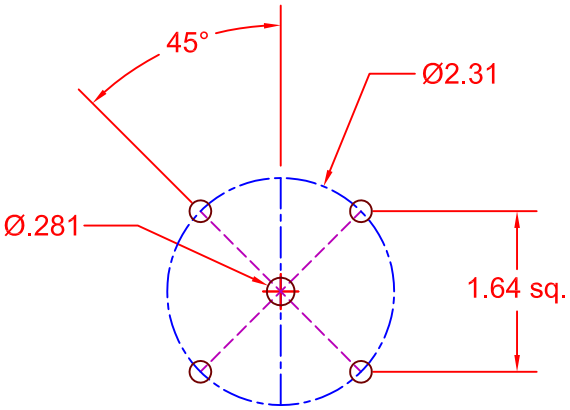

MOUNTING DETAIL

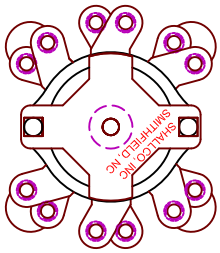

KNOB

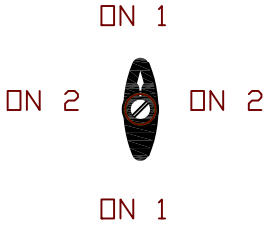

CIRCUIT

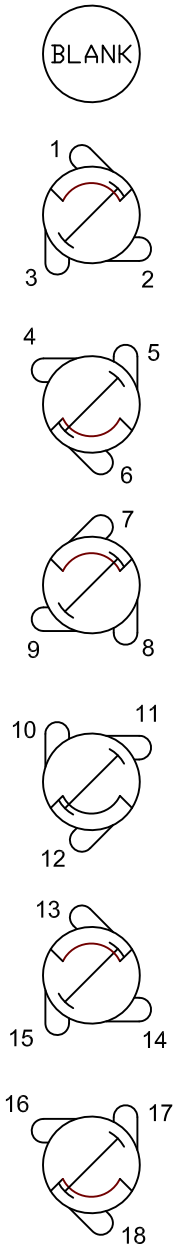

PART NUMBER

1B06-4

SHALLCO
308 COMPONENTS DRIVE
SMITHFIELD, NC 27577 USA